AC METAL FACE INDUCTIVE PROXIMITY SWITCH

Diameter	M 12		M 12	
● Shielded ○ non-Shielded	●	○	●	○
Switching Distance Sn mm	2 mm	4 mm	2 mm	4 mm
Housing Material	Stainless steel		Stainless steel	
● With LED ○ Without LED	●		●	
Dimensions (unit: mm)	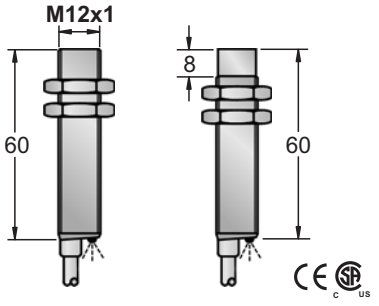		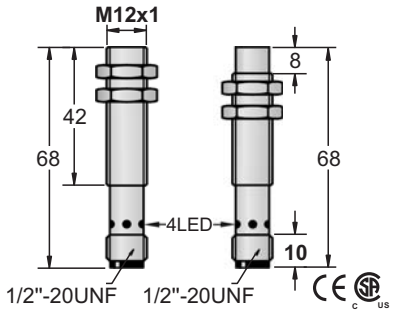	
Operating Voltage	20-250VAC		20-250VAC	
Ripple	-		-	
No Load Current	<1.8mA		<1.8mA	
Max. Load Current	400mA		400mA	
Leakge Current	<1.8mA		<1.8mA	
Surge Current	5A(20ms)		5A(20ms)	
Min. Load Current	5mA		5mA	
Voltage Drop	<8VAC AT 400mA		<8VAC AT 400mA	
Switching Frequency	25HZ		25HZ	
Response Time	10ms/10ms		10ms/10ms	
Switching Hysteresis	<15%(Sr)		<15%(Sr)	
Repeat Accuracy	<1.0%(Sr)		<1.0%(Sr)	
Protection Category	IP67		IP67	
Operating Temperature	-25°C - +70°C		-25°C - +70°C	
Temperature Drift	<10%(Sr)		<10%(Sr)	
Short Circuit Protection	NO		NO	
Overload Trip Point	–		–	
Time Delay Before Availability	–		–	
EMC	RFI>3V/m / EFT>1KV / ESD>4KV (contact)		RFI>3V/m / EFT>1KV / ESD>4KV (contact)	
Shock / Vibration	IEC 60947-5-2,Part 7.4.1 / IEC 60947-5-2,Part 7.4.2		IEC 60947-5-2,Part 7.4.1 / IEC 60947-5-2,Part 7.4.2	
Material Active Face	Stainless steel		Stainless steel	
AC 2 wire 20-250V N.O.	FCS1-1202A-A3L2	11	FCS2-1204A-A3L2	FCS1-1202A-AUL3	56	FCS2-1204A-AUL3
AC 2 wire 20-250V N.C.	FCS1-1202A-B3L2	12	FCS2-1204A-B3L2	FCS1-1202A-BUL3	56	FCS2-1204A-BUL3
AC 2 wire 20-250V N.O. or N.C. Changeable						
AC/DC 2 wire 20-250V N.O.						
AC/DC 2 wire 20-250V N.C.						
AC/DC 2 wire 20-250V N.O. or N.C. Changeable						
Remark	Please see Page 18 for details and specifications of DC 2-Wire models on this page.					
Cable 2M (PVC)	4φ3x0.15					
Weight	Approx.67 g		Approx.65 g	Approx.62 g		Approx.60 g

AC METAL FACE INDUCTIVE PROXIMITY SWITCH

M 18			M 18			M 18		
●	○		●	○		●	○	
5 mm	8 mm		5 mm	8 mm		5 mm	8 mm	
Stainless steel			stainless steel			stainless steel		
●			●			●		
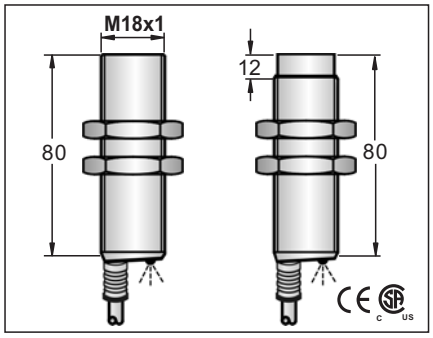			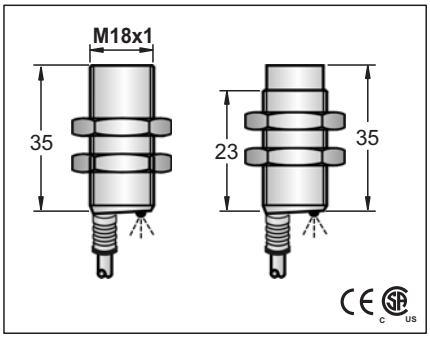			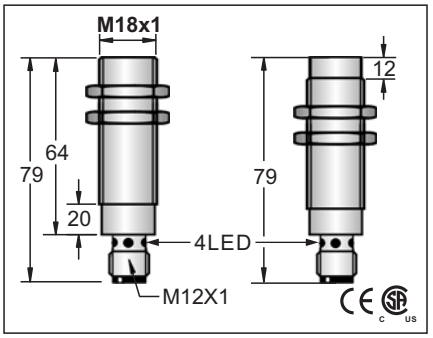		
20-250VAC			20-250VAC			20-250VAC		
-			-			-		
<1.8mA			<1.8mA			<1.8mA		
400mA			400mA			400mA		
<1.8mA			<1.8mA			<1.8mA		
5A(20ms)			5A(20ms)			5A(20ms)		
5mA			5mA			5mA		
<8VAC AT 400mA			<8VAC AT 400mA			<8VAC AT 400mA		
25HZ			<25HZ			<25HZ		
10ms/10ms			10ms/10ms			10ms/10ms		
<15%(Sr)			<15%(Sr)			<15%(Sr)		
<1.0%(Sr)			<1.0%(Sr)			<1.0%(Sr)		
IP67			IP67			IP67		
-25°C - +70°C			-25°C - +70°C			-25°C - +70°C		
<10%(Sr)			<10%(Sr)			<10%(Sr)		
NO			NO			NO		
–			-			-		
–			-			-		
RFI>3V/m / EFT>1KV / ESD>4KV (contact)			RFI>3V/m / EFT>1KV / ESD>4KV (contact)			RFI>3V/m / EFT>1KV / ESD>4KV (contact)		
IEC 60947-5-2,Part 7.4.1 / IEC 60947-5-2,Part 7.4.2			IEC 60947-5-2,Part 7.4.1 / IEC 60947-5-2,Part 7.4.2			IEC 60947-5-2,Part 7.4.1 / IEC 60947-5-2,Part 7.4.2		
Stainless steel			Stainless steel			Stainless steel		
FCS1-1805A-A3L2	11	FCS2-1808A-A3L2	FCS1-1805A-A3S2	11	FCS2-1808A-A3S2	FCS1-1805A-AUL3	56	FCS2-1808A-AUL3
FCS1-1805A-B3L2	12	FCS2-1808A-B3L2	FCS1-1805A-B3S2	12	FCS2-1808A-B3S2	FCS1-1805A-BUL3	56	FCS2-1808A-BUL3
5.0 ϕ 44x0.1			5.0 ϕ 44x0.1					
Approx.45 g	Approx.42 g		Approx.156 g	Approx.146 g		Approx.69 g	Approx.68 g	

AC METAL FACE INDUCTIVE PROXIMITY SWITCH

M 18		M 30		M 30	
●	○	●	○	●	○
5 mm	8 mm	10 mm	15 mm	10 mm	15 mm
stainless steel		stainless steel		stainless steel	
●		●		●	

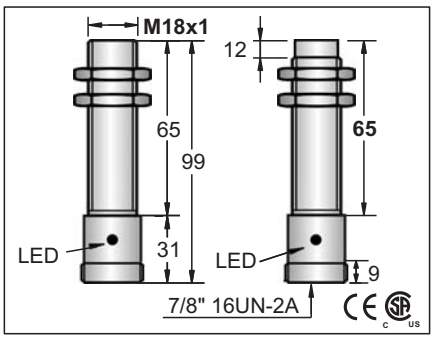

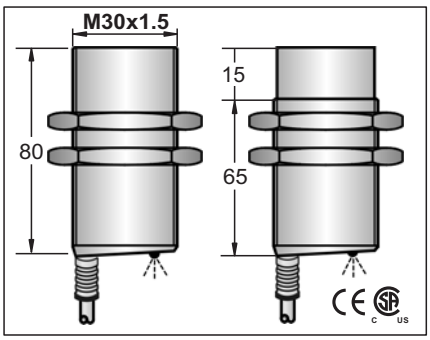

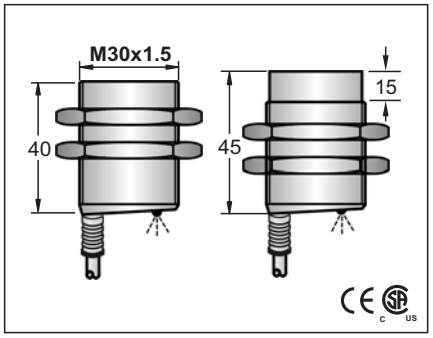

20-250VAC			20-250VAC			20-250VAC		
-			-			-		
<1.8mA			<1.8mA			<1.8mA		
400mA			400mA			400mA		
<1.8mA			<1.8mA			<1.8mA		
5A(20ms)			5A(20ms)			5A(20ms)		
5mA			5mA			5mA		
<8VAC AT 400mA			<8VAC AT 400mA			<8VAC AT 400mA		
<25HZ			<25HZ			<25HZ		
10ms/10ms			10ms/10ms			10ms/10ms		
<15%(Sr)			<15%(Sr)			<15%(Sr)		
<1.0%(Sr)			<1.0%(Sr)			<1.0%(Sr)		
IP67			IP67			IP67		
-25°C-+70°C			-25°C-+70°C			-25°C-+70°C		
<10%(Sr)			<10%(Sr)			<10%(Sr)		
NO			NO			NO		
-			-			-		
-			-			-		
RFI>3V/m / EFT>1KV / ESD>4KV (contact)			RFI>3V/m / EFT>1KV / ESD>4KV (contact)			RFI>3V/m / EFT>1KV / ESD>4KV (contact)		
IEC 60947-5-2,Part 7.4.1 / IEC 60947-5-2,Part 7.4.2			IEC 60947-5-2,Part 7.4.1 / IEC 60947-5-2,Part 7.4.2			IEC 60947-5-2,Part 7.4.1 / IEC 60947-5-2,Part 7.4.2		
Stainless steel			Stainless steel			Stainless steel		
FCS1-1805A-AZL3	65	FCS2-1808A-AZL3	FCS1-3010A-A3L2	11	FCS2-3015A-A3L2	FCS1-3010A-A3S2	11	FCS2-3015A-A3S2
FCS1-1805A-BZL3	65	FCS2-1808A-BZL3	FCS1-3010A-B3L2	12	FCS2-3015A-B3L2	FCS1-3010A-B3S2	12	FCS2-3015A-B3S2
			5.8∅3x0.5			5.8∅3x0.5		
Approx.94 g		Approx.91 g	Approx.267 g		Approx.257 g	Approx.229 g		Approx.219 g

Note:
Coming Soon : Part numbers with underline

AC METAL FACE INDUCTIVE PROXIMITY SWITCH

M 30		M 30	
●	○	●	○
10 mm	15 mm	10 mm	15 mm
stainless steel		Stainless steel	
●		●	

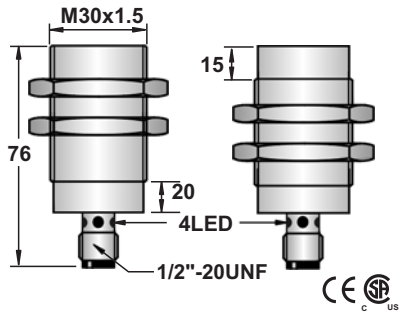

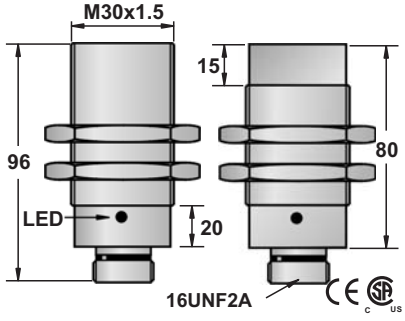

20-250VAC			20-250VAC		
-			-		
<1.8mA			<1.8mA		
400mA			400mA		
<1.8mA			<1.8mA		
5A(20ms)			5A(20ms)		
5mA			5mA		
<8VAC AT 400mA			<8VAC AT 400mA		
<25HZ			<25HZ		
10ms/10ms			10ms/10ms		
<15%(Sr)			<15%(Sr)		
<1.0%(Sr)			<1.0%(Sr)		
IP67			IP67		
-25°C -+70°C			-25°C -+70°C		
<10%(Sr)			<10%(Sr)		
NO			NO		
-			-		
-			-		
RFI>3V/m / EFT>1KV / ESD>4KV (contact)			RFI>3V/m / EFT>1KV / ESD>4KV (contact)		
IEC 60947-5-2,Part 7.4.1 / IEC 60947-5-2,Part 7.4.2			IEC 60947-5-2,Part 7.4.1 / IEC 60947-5-2,Part 7.4.2		
Stainless steel			Stainless steel		
FCS1-3010A-AUL3	56	FCS2-3015A-AUL3	FCS1-3010A-AZL3	65	FCS2-3015A-AZL3
FCS1-3010A-BUL3	56	FCS2-3015A-BUL3	FCS1-3010A-BZL3	65	FCS2-3015A-BZL3
Approx.167 g		Approx.157 g	Approx.267 g		Approx.257 g

Note:
Coming Soon : Part numbers with underline